WATERAX

WE MOVE WATER

VERSAX
Owner's Manual

Publication Date: 8/2016
Publication Number: 701244, Rev. 5

WATERAX

This document provides information proprietary to *WATERAX* Inc. and cannot be used or disclosed without *WATERAX*'s written authorization.

WATERAX Inc. reserves the right to make changes without notice in its products or components as research and development or marketing conditions warrant. Changes affecting the operation of any component in this manual will be reflected in a subsequent revision. *WATERAX* Inc. assumes no responsibility for any omissions or errors that may appear in this document or for any damages that may result from the use of information contained herein.

The following are trademarks or brand names of *WATERAX* Inc.: *WATERAX*, '*WE MOVE WATER*'. All other trademarks used in this manual are the exclusive property of their owner.

VERSAX Owner's Manual
Publication No.: 701244, Rev. 5
Publication Date: 8/2016
First Edition: March 2015

Published by:

WATERAX Inc.
6635 Henri-Bourassa W.
Montreal, Quebec, CANADA
H4R 1E1

Copyright © 2015 *WATERAX* Inc.
All rights reserved

Printed in Canada

WATERAX

Contents

Important Safety Instructions **2**
Personal Safety Advisory 2
Warnings 2

Preventing Damage to Equipment **3**

Introduction **3**
About this Manual 3
Abbreviations and Terms 4
About the VERSAX Series 5
Parts Identification 6

Installation **6**
Plumbing 6
Fastening to Truck/Apparatus 6
Installing a Control Panel 7
Using a Battery for Electric Starters and Control Panels 7

Operating VERSAX Series Pumps **8**
Pre-Operation Checklist 8
Flooded Suction 8
Drafting 9
Priming the Pump 10
Startup and Discharge 11
Shutdown 11
Cold Weather Operation 12
Basic Care and Storage 12
Troubleshooting 13

Service **15**
Parts Breakdown 15
Disassembly and Assembly of the Pump End 20
Disassembly Procedure for VERSAX Pump End 17
Assembly Procedure for VERSAX Pump End 17
VERSAX-9 Wiring 22
FastWire Wiring Diagrams 23

Pump End Technical Data **24**

Warranty **27**

Important Safety Instructions

It is recommended that all information provided in this manual be carefully read and understood before performing any operation of or maintenance to the pump.

The procedures listed in this manual are general operating and maintenance procedures. They should be taken in addition to any procedures, policies and guidelines established by the authority having jurisdiction or the apparatus manufacturer. Where conflicts arise, all parties (authority having jurisdiction, the apparatus manufacturer, and *WATERAX* Inc.) will need to be contacted to determine the best resolution. The solution will need to address the safety of the operator along with the proper performance and life expectancy of the unit.

Personal Safety Advisory

READ YOUR ENGINE MANUAL FIRST!

Before proceeding further, locate and read the engine manufacturer's manual. It contains very important safety information that MUST be read, understood and followed to safeguard you and your equipment from harm, as well as specific information on the proper use and care of your engine.

READ THIS MANUAL BEFORE OPERATING YOUR PUMP!

The improper use of the *WATERAX* pump could result in serious injuries as well as damage to the pump. Any operator should familiarize himself with the apparatus and its capabilities before trying to operate the equipment in an emergency situation. Please read this entire manual before using your *WATERAX* pump and follow all Personal Safety Advisories.

Warnings

- Always wear eye and ear protection when operating the pump unit.
- Do not operate if mentally or physically fatigued.
- Always inspect hoses and piping to avoid burst injuries.
- Use only pipe, hose, and fittings that are rated at or above the maximum pressure rating of the pump shown below, or according to what maximum pressure the system was designed for, whichever is lower.
  - Maximum Allowable Pressure: 190 PSI (13 bar)
- No modifications and/or alterations may be made to the pump. Any such modifications not only void the pump warranty but can make the unit dangerous to anyone operating the pump.
- Do not operate the pump higher than the maximum rated pressure. Always run the unit at the lowest pressure required for the application to enhance operator and equipment safety.
- Slowly close valves and use slow close valves wherever possible to prevent danger to other line operators and to prevent water hammer which could damage the pump and its piping components.
- Relieve all system pressure before doing any service work on the pump.
- Never run the pump in a closed or confined area. Exhaust gas contains carbon monoxide which is poisonous to humans. Avoid inhalation of exhaust gas.
- Refuel engine with care. Gasoline is flammable, and gasoline vapor can explode. Refuel in a well-ventilated area, with the engine stopped.
- Be alert and never touch any part of the engine exhaust system (muffler, shield, header pipes, etc.) while the engine is running. Always allow enough time, after stopping the unit, for proper cooling of the muffler and surrounding parts.

- Do not ground the battery (if applicable) through the pump's frame members; always ground to a bare metal (unpainted) part of the engine block to ensure proper ground.
- Disconnect battery before any maintenance to the pump unit.

Preventing Damage to Equipment

The following recommendations will help avoid damage to your equipment:

- Flush the pump with fresh water if the pump has been used to pump salty, brackish, high mineral content water, water containing debris, or foam injected water. Check that debris is cleared before using pump again.
- Always draft water using a suction hose strainer.
- During freezing weather, drain the pump, manifolds, and lines of all water. You can also pour some antifreeze into the pump and circulate it through the pump and plumbing system.
- Let the engine warm up before using the unit at full speed.
- Always use the proper unleaded gasoline fuel as recommended in the engine manufacturer's manual.
- Always check for sufficient oil quantity in the engine crankcase before use (see engine manual for details on checking the oil level, as well as for the type of oil to use).
- Pumps should not be operated without water for any extended period of time or without discharging water. Operating the pump in such a manner can overheat the pump causing damage to seals, or pump internals.
- It is recommended that all fasteners be replaced with genuine *WATERAX* parts.
- When mounting manifolds to the pump, the manifolds must be self-supporting and coupled to the pump by means of a flex coupling such as a Victaulic® coupling or flex hose.
- When hoisting the pump onto an apparatus, take care when using lifting hooks (if applicable) and avoid any contact with components adjacent to the fixation points.
- Never disconnect the battery (if applicable) while the engine is running, as this may damage the control panel's electrical components.

Introduction

About this Manual

This manual contains general operation, care and servicing procedures for the following *WATERAX* VERSAX-6/9 2-stage self-priming pump.

Pump designation	Engine used
VS2-6V	Honda GX200 6 HP gasoline engine
VS2-6P	Honda GX200 6 HP gasoline engine
VS2-9P	Honda GX270 9 HP gasoline engine
VS2-9EV	Honda GX270E 9 HP gasoline engine

These instructions cover most wildland and municipal pump applications. If the application the pump is being used for does not fall into these general guidelines, consult *WATERAX* Inc. for any additional safeguards, operating, or maintenance considerations that may be required.

For full service and maintenance instructions regarding the pump, please refer to the Service section. For maintenance instructions regarding the engine, as well as for oil and fuel recommendations, refer to the engine manufacturer's manual.

Please see www.waterax.com additional documentation related to this product such as the *WATERAX* product guide, technical notes, links to the engine manufacturer's manuals, news and other updates about *WATERAX* and its goods and services.

Abbreviations and Terms

The following terms and abbreviations are used in this manual:

Cavitation	Formation of air bubbles in a liquid inside a centrifugal pump, causing low pressure points and loss of pump capacity.
Dead-heading	Also called shut-off. Leaving the pump running with all the discharge valves closed. The pump should not be left in this mode for more than a minute since the pump can overheat and become damaged. To avoid this, a re-circulation line (if provided) should be opened or a discharge line left slightly open to allow fresh water to continue to enter the pump.
Drafting	Process of using vacuum (suction) to take water from a stream or impoundment.
NH	National Hose. This is a type thread specified in NFPA 1963. Formerly known as NST (National Standard Thread).
NPSH	National Pipe Straight Hose. This is a type of thread that is slightly smaller in diameter than NH, with more threads per inch than the same nominal size of NH thread. NPSH is also called IPT (Iron Pipe Thread).
NPT	National Pipe Thread Taper. This thread is similar to NPSH thread except for the taper. A sealant compound or Teflon tape must be used when installing NPT fittings for a leak-free seal. NPSH female fittings are often used on NPT male threads; the gasket makes the seal.
BSP	British Standard Pipe
RPM	Revolutions Per Minute.

About the VERSAX Series

Features

For full specifications and performance curves, see the Product Data Sheet for your pump end model.

Applications of the *WATERAX* VERSAX series include:

- Firefighting
- Tank filling
- High head general water transfer
- Boom spraying
- Irrigation

Features and Benefits of the *WATERAX* VERSAX series include:

- Twin impeller design provides additional pressure for longer & higher pumping actions.
- Pump casing and diffusers manufactured from quality corrosion resistant grade aluminum for long life.
- Nylon glass fiber reinforced impellers fully corrosion proof and lightweight.
- 3-way discharge port for easy installation.
- Powder coated casing for added corrosion resistance.
- Self-priming for more versatile installation options.
- Easy to access drain port
- Low oil protection.
- Comprehensive manuals
- EPA Certified

Configurations

The VERSAX series is used for a variety of wildland and municipal firefighting applications. Your model may be configured as a **portable**, standalone pump equipped with a carry handle, or it may be purchased in the **vehicle-mount** configuration that can be directly fastened onto a fire apparatus.

Parts Identification

VERSAX 6/9

A. Priming port (2” BSP)
B. Pump discharge (1” NPT)
C. Pump discharge (1-1/2” NPT)
D. Pump intake - suction (2” NPT)
E. Pump drain
F. Oil fill (not shown)
G. Ignition switch
H. Recoil starter*
I. Fuel cap
J. Throttle (not shown)
K. Fuel valve (not shown)
L. Choke (not shown)
M. Muffler

Note: VS2-6 model shown with GX200 engine. Carry handle available on portable models.
* Electric starter available on GX270E engine models

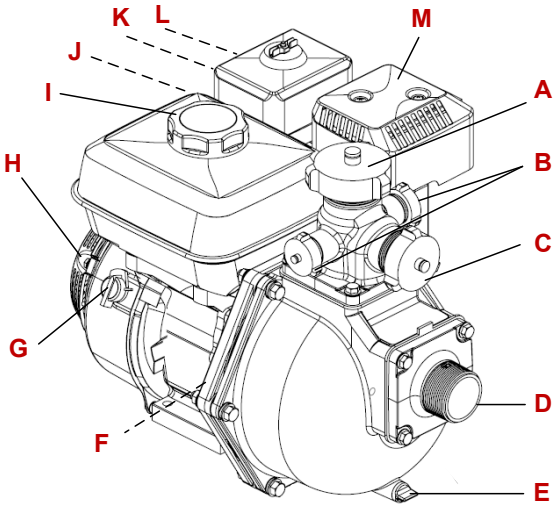

Installation

Depending on your model and configuration ordered, you may require additional accessories from *WATERAX* or from third-party vendors, for example, control panels and batteries. You will also require hoses and nozzles as well as other fire apparatus plumbing which can be purchased through your *WATERAX* representative. Follow the instructions and heed all warnings in any documentation that you receive with the accessories you purchase.

Plumbing

When installing any plumbing on a pump fixed to a platform, the plumbing **MUST be self-supported** and coupled to the pump by means of a flex coupling such as a Victaulic® coupling or flex hose.

Fastening to Truck/Apparatus

When adding any equipment to a vehicle, follow all instructions and heed all warnings provided by manufacturers of the apparatus and any third-party accessories. *WATERAX* provides certain accessories used in vehicle-mount configurations of the VERSAX series pumps. Follow all documentation that ships with any accessories you have ordered.

Before installing the pump in a vehicle, plan for adequate access to any fill caps such as those for oil or fuel, as well as any other part of the pump or engine that is frequently accessed or inspected (valves, panels, filters, etc.). Make note of components that become hot when operating such as mufflers and engine blocks, and always ensure a safe clearance around them.

Installing a Control Panel

See User Instructions shipped with the specific model of control panel you ordered for your pump.

Using a Battery for Electric Starters and Control Panels

The VS2-9EV requires a battery to power electrical and electronic components such as starters, and control panels. Make sure to follow all instructions and heed all warnings provided by your battery manufacturer. Refer to the engine manual for battery requirements. Always follow safety guidelines set out by your company. Never connect or disconnect a battery to a pump that is operating.

Operating VERSAX Series Pumps

Pre-Operation Checklist

Before using your pump, follow this verification procedure:

1. Visually inspect product

   When you first receive your VERSAX pump, inspect the product and check for any damage. Notify the supplier if any damage is found.

2. Check all fluid levels regarding the pump and any related equipment. Before first use, you must prepare the engine which is shipped dry. Before each subsequent use, check levels and top up as needed.
   - Engine/apparatus fuel level
   - Engine/apparatus oil level

Refer to the engine manufacturer's manual for specific instructions regarding the engine.

3. Check that all suction and discharge hoses are structurally sound and do not leak.
4. Visually inspect any electrical or electronic components for damage.
5. Inspect all safety features and verify that they are in good order before using the pump.
6. Each time you plan to use the pump, check for damage that may have occurred during previous use. Notify your manager that the equipment requires repair. Remember that damaged equipment can expose you to safety hazards.

Flooded Suction

Use this procedure if you are taking water from a hydrant, another pump, or a closed tank. Be sure to understand and follow all related equipment, apparatus, departmental, and governmental procedures, policies, recommendations, and guidelines concerning hydrant connecting and operation before performing this mode of operation.

1. Connect the intake hose to the pump intake or intake piping.
2. Connect opposing end of the hose to the hydrant or water source (a tank may already be connected). Make sure that all connections are strong and tight and that all pump valves are closed.
3. Check that all equipment is rated to the proper pressure limits that they will be exposed to during this mode of operation. DO NOT exceed the maximum pressure of the pump.
4. Slowly open the pump inlet valves allowing the water into the pump body.
5. Slowly open the discharge valves to allow for entrapped air in the piping to escape.
6. Once all the air has escaped, close any opened valves so that the unit may be started.
7. Go to the *Startup and Discharge* section of this manual to begin pumping water.

The pump will not discharge more water than the capacity of the water source (hydrant). The pressure reading on the pump's master intake gauge should never fall below 0 PSI during the pump operation in this mode.

Drafting

Before you draft

Pumps should not be run dry, and therefore the pump ends require priming prior to operation. Use this procedure if you are drafting water from an open tank or natural water source.

To maintain optimum performance from your pump, follow these recommendations for selecting and installing your suction hose or pipe:

- Use the shortest length possible, i.e., place the pump as close to the water as possible.
- Select reinforced crush resistant (non-collapsible) hose or pipe.
- Make sure that all pipes have air tight fittings.
- To avoid air locks, flexible hose should rise gently from the water source to the suction/inlet port without excessive dips, bumps, sharp angles or rise in its lay.
- Pipes should be equal to or larger than the diameter of the suction/inlet port.
- Suction strainers should be fitted to prevent foreign matter from entering the pump.
- Where practicable, the installation and use of a suction float will aid in the performance of your pump, by keeping suction away from the debris on the bottom of the dam or river.
- Ensure that the suction hose is completely submersed.

Limitations

Several factors can affect the pump's ability to efficiently draft water. The following limitations should be taken into account.

- Water temperatures above 35 °C (95 °F) can cause noticeable loss in pump performance.
- Barometric pressures below 98 kPa (29 in of Hg) can also cause noticeable loss in pump performance (specifically elevations >2000 feet above sea level).
- Pump performance curves are based off a 5 foot lift (top of water source to impeller center). Lifts greater than 5 feet will decrease the pump's performance.
- Hose and strainer sizes that are too restrictive can significantly decrease the pump's performance.
- Intake hose runs in excess of 10 feet can also reduce pump performance.
- Self-priming maximum lift is of 11.5 feet. The use of a foot-valve will improve self-priming efficiency. Performing lifts greater than 11.5 feet will require the use of a primer.

Drafting connections

1. Connect a suction line to the pump intake.
2. Install a suction strainer on the other end of the suction hose and place in the water source.

Note:	To provide proper operation of the pump, the suction hose/strainer should be submerged a minimum of 4 to 6 times the hose diameter into the water source. **DO NOT** allow footvalve strainer to rest on bottom of lake or riverbed. Check strainer frequently to make sure that it is not clogged with moss, leaves, etc. **DO NOT** lift strainer from water while the pump is operating. Use a rope or other means to keep strainer at proper height, approximately 1 foot (30 cm) below water surface. If strainer is too close to the water surface, it will draw air and pump may lose prime.

Priming the Pump

Before priming the pump, discharge hoses should be installed.

Self-Priming:

Fill the pump end to prime the pump.

1. Remove the priming cap.
2. Using clean water, fill the pump end completely via the vertical 2” BSP priming port.
3. Replace the priming cap and screw it down tightly to seal.

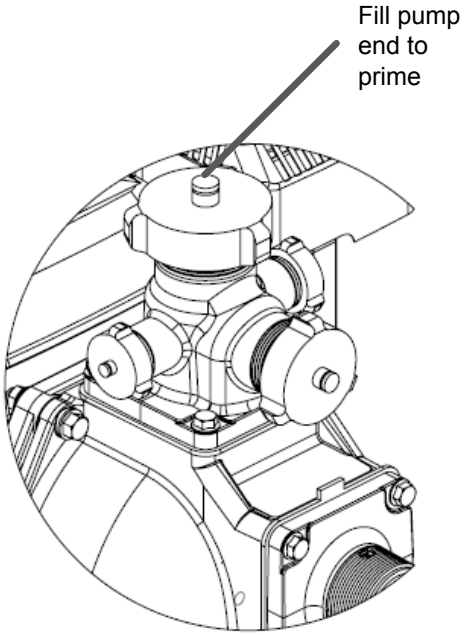

Startup and Discharge

1. **Fill fuel tank with recommended fuel grade.**
   Fill tank and securely replace cap.
2. **Start the engine.**
   a. Open fuel valve.
   b. Close/engage choke, if engine is cold.
   c. Increase throttle past the idle position.
   d. Position the ignition switch to the ON position.
   e. Start engine: give starter rope a quick and steady pull until engine starts or use electric starter (see engine manual).
   f. Open/disengage choke.
   g. Increase the throttle past the halfway mark and wait for the pump to self-prime; pressure will build in the discharge hose. If there is no water flowing out, it would indicate a leak in the suction. Retighten the suction and wait for the pump to self-prime. Depending on the suction lift and length of the suction hose, it may take several minutes to prime.
   h. Allow the engine to warm up for at least 2 minutes before using full throttle.

Note:	Leaving the pump running with all the discharge valves closed is called **deadheading** the pump. The pump should not be left in this mode for more than a minute. Leaving in this condition for any length of time will cause the pump to overheat and damage the pump. To avoid overheating the pump, a re-circulation line (if provided) should be opened or a discharge line left slightly open to allow fresh water to continue to enter the pump.

3. **Discharge water.**
   Once the pump is primed, and with the engine running, you can begin to discharge water.
   a. Slowly open the discharge valve. If pressure does not build in the discharge hose, the pump has not been fully primed. The valve should be closed and the pump primed again.
   b. Adjust the pump performance by throttling the engine up or down, or opening or closing discharge valves at various positions, or any combination of the two.

Note:	If the engine throttle is increased and the engine RPM increases without an increase in pump pressure, the pump may be cavitating. Refer to the limitations listed at the beginning of this section, and see the troubleshooting section for a verification checklist and possible solutions.

Shutdown

1. After completing the pump operation, gradually reduce the engine RPM and slowly close the discharge valves (preferably in the order listed).
2. Whenever the unit has been run at full throttle for most of the operation, allow the valves to remain slightly open and run the engine at idle for approximately 2 minutes before shutting down the unit.
3. If the pump was last run with foam or water that is salty, brackish or high in mineral content, flush the pump with fresh water for a minimum of 2 minutes or until the water is clear.
4. Close off the hydrant or water supply to the pump.
5. Open all valves to relieve any pressure left in the system.

Cold Weather Operation

The pump can be run in below freezing temperatures if certain precautions are taken to avoid the formation of ice in the pump.

1. After priming the pump, the unit should be run at low speed for a short period of time to allow all components to warm up before continuing with the remaining operating procedures.
2. Unless wrapped in a heater, drain the pump of all water if it is stopped for any length of time. The engine/drive unit should be turned over a few revolutions to make sure all water has been removed from the pump. Drain the pump priming line if a primer has been used.
3. After use, drain the pump, manifolds, and lines of all water. You can also pour some antifreeze into the pump and circulate it through the pump and plumbing system.

Basic Care and Storage

The basic care described in this section does not require any disassembly of the pump. For any servicing procedures that require removing any part of the pump to access a component, please see the Service section.

WARNING: Before doing any maintenance to the pump, always ensure that the equipment cannot be accidentally started. Follow any apparatus and/or departmental procedures or guidelines in regards to locking out the equipment.

Regular maintenance

After each use:

1. Visually inspect the pump unit.
2. Make sure the mechanical rotary seal is not leaking.
3. Check the pump for external leaks.
4. Check the engine for leaks.
5. Clean any dirt or debris from the pump unit. If necessary, a mild soap and water solution can be used.
6. Note and report any performance irregularities or any abnormal mechanical sounds.
7. Check all fluid levels and add as needed.
8. Make sure all necessary tools, spares, and accessories are with the pump.

Long-term storage

1. Completely drain the pump of all water.
2. Drain the carburetor. The engine can be run with the fuel valve lever in the OFF position to drain the system.
3. Drain the fuel tank.
4. Close all valves and plug all openings.
5. Follow any other products, components, apparatus, and departmental procedures and/or guidelines before placing the unit in storage.

Troubleshooting

This section provides brief troubleshooting instructions for verifying the set-up and operation of the pump. Each section describes a condition and lists possible causes along with a list of items to check to identify the source of the problem and resolve it.

Pump Loses Prime or Will Not Prime

Air Leaks	Attempt to locate and correct the air leaks by isolating each system component. ■ Verify that the suction hose is in good condition and is properly tightened. ■ Verify that the suction hose gasket is in good condition.
Air Trapped in Suction (Pump Intake) Line	■ Check that no part of the suction hose or piping is higher than the pump intake. Pump suction hose and piping must be laid out with a continuous decline to the water source from the pump intake
Long Suction Hose with High Lift	■ While running the pump, verify if the suction hose is being filled. ■ If the water level has stopped rising, the water level inside the pump body was totally discharged. Re-fill the pump body and try again. ■ Partially restricting the discharge hose will improve priming time.
Blocked or Restricted Intake Hose or Strainer	■ Remove blockage from the intake hose or strainer. ■ Strainer should not be sitting at the bottom of the water source where debris can be picked up. Clean off the strainer and raise to a position that is off the bottom of the water source (floating strainers are available). ■ If the strainer is new, check that the strainer hole size is not too restrictive for the demands of the pump.
Pump Suction Lift Requirements are Too High	■ DO NOT attempt pump lifts exceeding 16 feet (5 meters). Higher suction lifts will negatively impact the flow rate and could lead to cavitation. ■ As elevation increases above 2000 feet above sea level, maximum lift heights will diminish. Check that the lift for the elevation the pump is being required to operate at is achievable.
Defective/ Obstructed Suction Flap Valve	■ Verify that the suction flap valve is operating freely and is not obstructed or damaged.

Pump Does Not Meet Performance

Incompatible Installation	■ Piping size and configuration may be too restrictive. Contact a *WATERAX* Inc. representative if assistance is needed in evaluating the unit's piping.
Gauge or Instrument Failure	■ Check that all gauges are calibrated and that all equipment is in proper condition. Nozzles with dented edges and bent or damaged pitot tubes will produce faulty readings.
Blockage	■ Check all hoses, tank, piping, etc. Remove any obstructions found. ■ Check for debris wedged or caught in the impeller or diffusers. Remove any obstructions found.
Insufficient Power to the Pump	■ Check engine compression and complete engine repairs if required. ■ An engine tune up may be needed to bring engine back to peak performance.

	■ An engine will lose approximate 3.5% of its power per every 1000 feet above sea level. If the elevation of operation was not considered when the unit was selected, a unit of higher horsepower may be required to make the needed performance.
Restriction	■ If a new strainer and/or intake hose was purchased, check that they provide adequate supply to the pump to meet the performance desired. ■ If the pump was purchased used, check that the actual configuration will achieve the desired performance. A *WATERAX* Inc. representative can be contacted for assistance. ■ Check pump lift. Refer to “Pump Loses Prime or Will Not Prime: Suction Lift Too High” section.

Pump Cavitating

Lift Too High	■ Move pump closer to water source. ■ Decrease pump’s intake hose length. ■ Increase pump’s intake hose size (inner diameter).
Water Temperature	■ Water temperature may be too high. Water temperatures approaching 35°C (95°F) or higher are likely to cavitate the pump. Decrease engine speed and/or gate the discharge valve to decrease pump flow until the cavitating stops. ■ Locate a cooler water source.
Restrictions	■ Refer to “Restrictions” in the “Pump Does Not Make Performance” section. ■ Check that the bottom of the suction hose a minimum of 2 feet (0.6 meters) from the bottom of the water source and correct if necessary. ■ Check that the bottom of the suction hose/strainer is 4 to 6 times the hose diameter below the water supply surface level and correct if necessary.

Engine Speed Too High for Required Capacity and Pressure

Air Leaks	■ Refer to “Pump Loses or Will Not Prime: Air Leak” section.

Service

This section includes instructions for overhaul and maintenance requiring disassembly of the *WATERAX* VERSAX series pumps. It *does not* include engine maintenance. For maintenance instructions regarding the engine, as well as for oil and fuel recommendations, please refer to the engine manufacturer's manual.

Note: It is recommended that all fasteners be replaced with genuine *WATERAX* parts.

Parts Breakdown

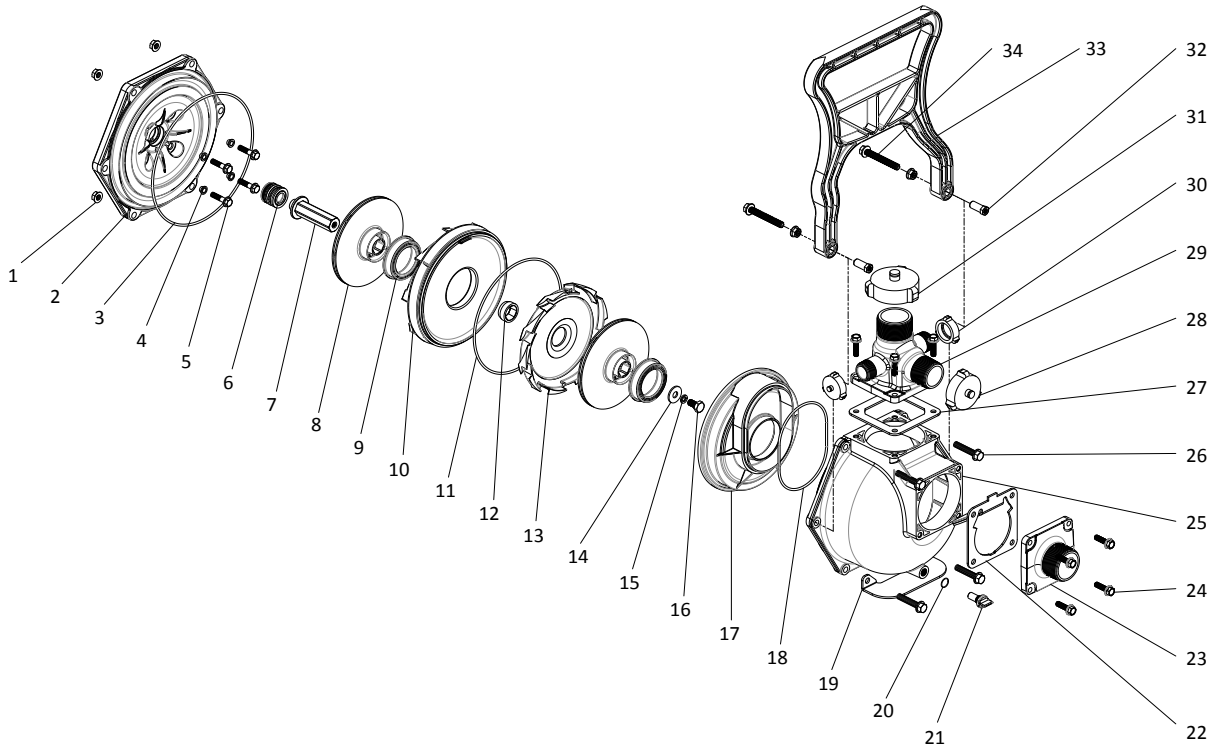

Figure 1: Exploded view of the VERSAX 6HP pump end (portable configuration).

ID	ITEM NO	DESCRIPTION	QTY
1	800208	VSC124 NUT CASING VERSAX	6
2	800216	VSC130 YOKE 3/4" SHAFT VERSAX	1
3	701292	O-RING #2250040 (METRIC) NITRILE 70 DURO	1
4	800228	VSC123 SEAL FOR BOLT VERSAX	4
5	800217	VSC133 BOLT 5/16" X 1-1/4" VERSAX	4
6	800213	VSC129 SEAL - MECHANICAL 3/4"	1
7	800215	VSC128 STUB SHAFT 5/8" VERSAX	1
8	800226	VSC132 IMPELLER SHAFT 5/8" VERSAX	2
9	800229	VSC131 WEAR RING 3/4" SHAFT VERSAX	2
10	800194	VSC114 DIFFUSER - 2ND STAGE VERSAX	1
11	800198	VSC113 O-RING DIFFUSER - INTERS VERSAX	1
12	800214	VSC127 SPACER SLEEVE 5/8&3/4SHA VERSAX	1
13	800190	VSC112 DIFFUSER - INTERSTAGE VERSAX	1
14	800189	VSC111 WASHER M10X30 VERSAX	1
15	800220	VSC120 WASHER (SPRING)-IMPELLER VERSAX	1
16	800207	VSC110 SCREW - IMPELLER VERSAX	1
17	800222	VSC109 SUCTION COVER VERSAX	1
18	800187	VSC119 O-RING SUCTION COVER VERSAX	1

ID	ITEM NO	DESCRIPTION	QTY
19	701162*	SUPPORT BRACKET PUMP END VERSAX	1
20	800227	VSC122 O-RING FOR DRAIN PLUG VERSAX	1
21	800195	VSC117 PLUG 1/4" DRAIN VERSAX	1
22	800191	VSC116 GASKET - CLACKER ASSY VERSAX	1
23	800199	VSC115 FLANGE - SUCTION 2"NPT VERSAX	1
24	800211	VSC126 SCREW M8 VERSAX	8
25	800192	VSC118 CASING VERSAX	1
26	800201	VSC125 BOLT - CASING VERSAX	4
27	800224	VSC107 GASKET - DISCHARGE VERSAX	1
28	300512*	ADP-A-C15S-NC 1.5 NPSH CAP W/O CHAIN	1
29	800230	VSC108 FLANGE - DISCHARGE VERSAX	1
30	300762*	ADP-A-C10S-NC 1 NPSH CAP W/O CHAIN	2
31	300761	ADP-A-C20BSP-NC 2 BSPP CAP W/O CHAIN	1
32	800209*	VSC105 NUT-BUSH 3/8" FOR HANDLE VERSAX	2
33	800223*	VSC103 HANDLE VERSAX	1
34	800202*	VSC104 BOLT-CASING FOR HANDLE VERSAX	2

* Not included on vehicle mount configuration.

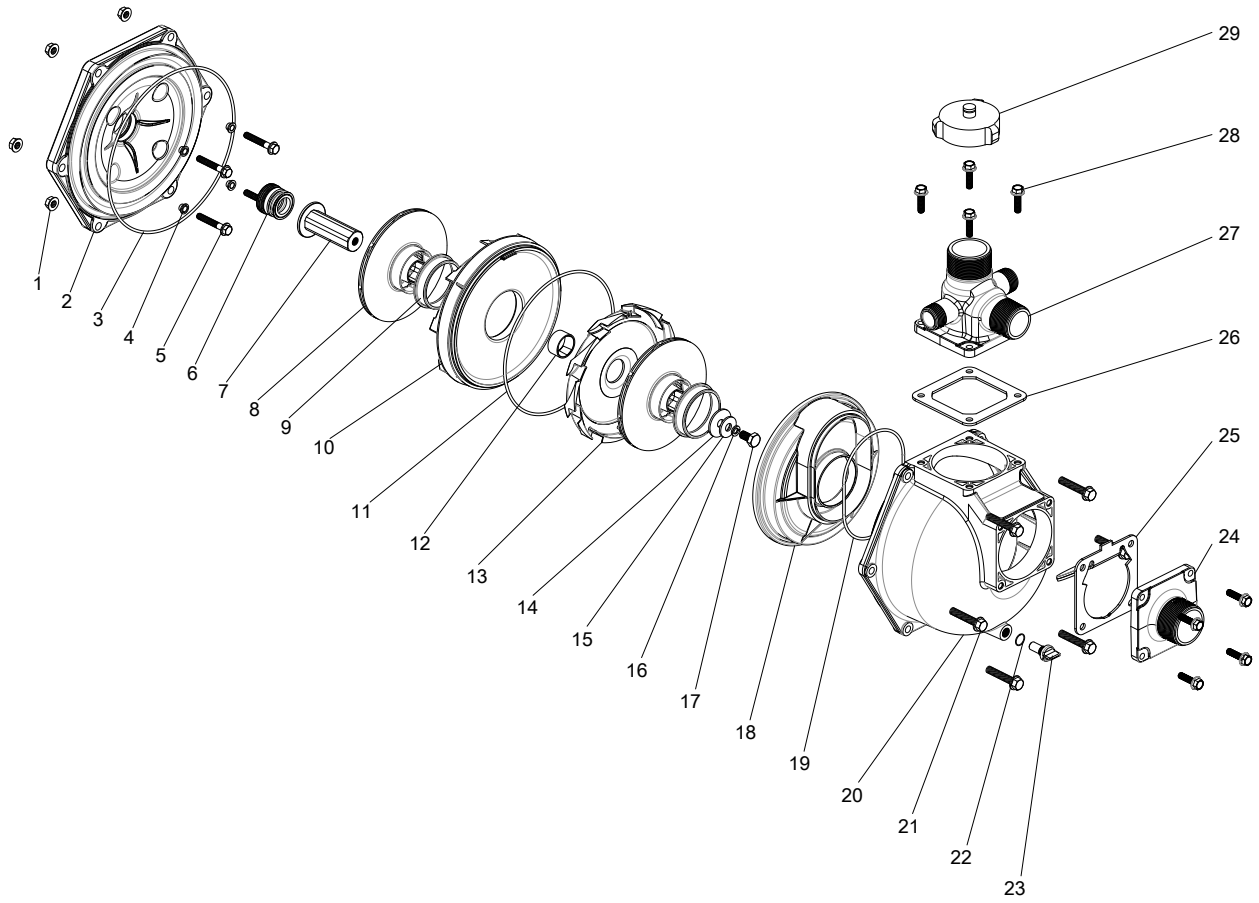

Figure 2: Exploded view of the VERSAX 9 HP pump end (vehicle configuration).

ID	ITEM NO	DESCRIPTION	QTY
1	800208	VSC124 NUT CASING VERSAX	6
2	800196	VSC138 YOKE SHAFT 1" VERSAX	1
3	701292	O-RING #2250040 (METRIC) NITRILE 70 DURO	1
4	800228	VSC123 SEAL FOR BOLT VERSAX	4
5	800219	VSC141 BOLT 5/16" X 2" LONG VERSAX	4
6	800200	VSC137 SEAL - MECHANICAL 1" VERSAX	1
7	800193	VSC136 STUB SHAFT 1" VERSAX	1
8	800218	VSC140 IMPELLER SHAFT 1" VERSAX	2
9	800197	VSC139 WEAR RING SHAFT1" VERSAX	2
10	800194	VSC114 DIFFUSER - 2ND STAGE VERSAX	1
11	800198	VSC113 O-RING DIFFUSER - INTERS VERSAX	1
12	800188	VSC135 SPACER SLEEVE 1" SHAFT VERSAX	1
13	800190	VSC112 DIFFUSER - INTERSTAGE VERSAX	1
14	800206	VSC134 WASHER IMPELLER M10X40 VERSAX	1
15	800189	VSC111 WASHER M10X30 VERSAX	1

ID	ITEM NO	DESCRIPTION	QTY
16	800220	VSC120 WASHER (SPRING)-IMPELLER VERSAX	1
17	800207	VSC110 SCREW - IMPELLER VERSAX	1
18	800222	VSC109 SUCTION COVER VERSAX	1
19	800187	VSC119 O-RING SUCTION COVER VERSAX	1
20	800192	VSC118 CASING VERSAX	1
21	800201	VSC125 BOLT - CASING VERSAX	6
22	800227	VSC122 O-RING FOR DRAIN PLUG VERSAX	1
23	800195	VSC117 PLUG 1/4" DRAIN VERSAX	1
24	800199	VSC115 FLANGE - SUCTION 2"NPT VERSAX	1
25	800191	VSC116 GASKET - CLACKER ASSY VERSAX	1
26	800224	VSC107 GASKET - DISCHARGE VERSAX	1
27	800230	VSC108 FLANGE - DISCHARGE VERSAX	1
28	800211	VSC126 SCREW M8 VERSAX	8
29	300761	ADP-A-C20BSP-NC 2 BSPP CAP W/O CHAIN, ALUM	1

Disassembly and Assembly of the Pump End

Before Disassembly or Assembly

- Read and follow all instructions thoroughly and carefully.
- Ensure shaft, bores, screws, etc. are free of burrs and lubricant.

Tools and Materials Required

- Torque wrench
- SAE Socket wrench with the following sockets:
  - 1/2"
  - 9/16"
  - 5/8"
  - 3/4"
  - 15/16"
  - 1-1/8"
- SAE Wrench key:
  - 9/16"

Disassembly Procedure for VERSAX Pump End

The following steps refer to figure 1

1. Remove handle #33 by removing the nut-bushings #32.
2. Remove nuts #1 from screws #34.
3. Remove screws #26 from nuts #1.
4. Remove pump casing #25.
5. Remove suction flange #23 and discharge flange #29 by removing screws #24.
6. Remove suction cover #17 and O-ring #18.
7. Remove wear ring #9 and note its orientation as it is important for the re-assembly.
8. Remove screw #16, lockwasher #15 and washer #14.
9. Remove #8 through #13. Take note of the orientation of #9 and #12 as it is important for the re-assembly.
10. Remove stub shaft #7, the rotating part of the mechanical rotary seal #6 will come with the stub shaft.
11. Remove O-Ring #3.
12. Remove the screws #5 and the bolt seals #4.
13. Remove yoke #2 (avoid hitting the stationary part of the mechanical rotary seal #6 on the engine shaft).

Assembly Procedure for VERSAX Pump End

The following steps refer to figure 1

1. Insert screws #34 in the two side-holes of the yoke #2 prior to yoke installation. This step must be done prior to the rest as the handle #33 will not fit otherwise. Screws #34 will remain loose until the casing is installed (Screw head to face the engine).
2. Install the stationary part of the mechanical rotary seal in the yoke. The carbide face to face away from the engine.
3. Align the yoke #2 to fit onto the Honda engine. Ensure that the drain slot for the seal is pointing down.
4. Insert the bolt seals #4 on the screws #5.
5. Fasten the yoke #2 with the screws #5. Apply a torque of 14-16 Nm (tighten in a cross sequence).
6. Install the O-ring #3 into the yoke #2 O-ring groove.

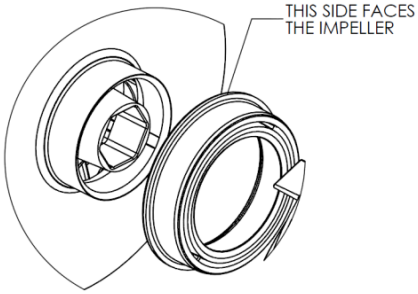

Figure 3

7. Install the rotating part of the mechanical rotary seal #6 onto the stub shaft #7. Ensure the carbide face will face the stationary part of the mechanical rotary seal. The two carbide face must face each other.
8. Screw the stub shaft #7 onto the engine shaft. The stub shaft will press the rotating part of the mechanical rotary seal #6 onto the stationary part.
9. Slide the impeller #8 onto the stub shaft #7.
10. Install the wear ring #9 onto the impeller. Note that the orientation of the wear ring is important here. Refer to figure 4.
11. Install the diffuser #10 onto the wear ring #9 and impeller #8. Ensure that the lug shown in figure 5 will align with the other diffuser and the internal notch of the suction cover #17.
12. Install the O-ring #11 into the diffuser #10 O-ring groove.
13. Place the spacer #12 onto the impeller #8. Note that the orientation is important here. Refer to figure 5.

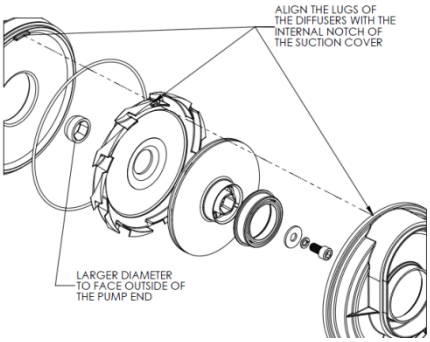

Figure 4

14. Install the diffuser #13 onto the diffuser #10. Ensure that the lugs shown in figure 5 are aligned.
15. Slide the second impeller #8 onto the stub shaft #7 until it rests on the spacer #12.
16. Install the wear ring #9 onto the impeller. Refer to figure 4.
17. Fasten screw #16 using the lockwasher #15 and washer #14. Apply a torque of 14-16 Nm.
18. Install suction cover #17 onto the impeller/diffuser assembly. Ensure that the internal notch of the suction cover #17 is aligned with the lug on the diffuser #13. Refer figure 5.
19. Install the O-ring #18 into the suction cover #17 O-ring groove.
20. Align the casing #25 with the yoke #2 and the suction cover #17.
21. Install the support bracket #19 with screws #26 and nuts #1.
22. Fasten the casing #25 using screws #26 and nuts #1. Apply a torque of 25 Nm to screws #26 (tighten in a cross sequence).
23. Install drain plug #21 and drain plug O-ring #20, tighten using fingers.
24. Install clacker gasket #22 and fix by installing suction flange #23 using screws #24. Apply a torque of 22-24 Nm (tighten in a cross sequence).
25. Install discharge gasket #27 and fix by installing discharge flange using screws #26. Apply a torque of 22-24 Nm (tighten in a cross sequence).
26. Fix screws #34 using nuts #1. Apply a torque of 25 Nm.
27. Install the handle #33 onto screws #34 using nut-bushings #32. Refer to figure 6.
28. Screw caps #28, 30 and 31 firmly using a universal hose coupling wrench. (For portable only)

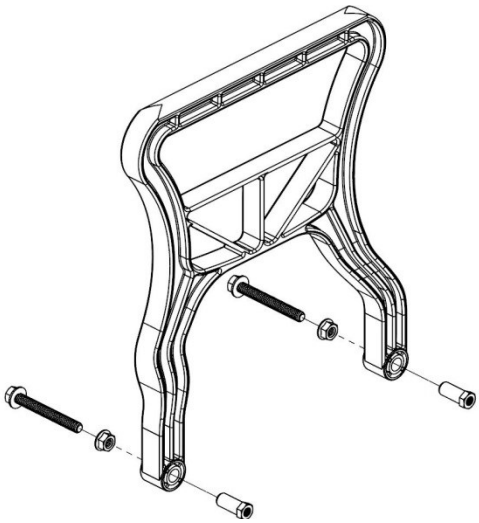

Figure 5

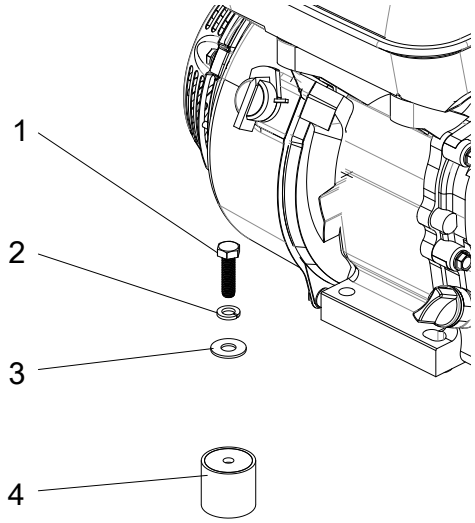

ID	ITEM NO	DESCRIPTION	QTY
1	801145	SCREW M8X1.25X30 HEX CAP ZINC	2
2	800548	R-119 LOCWASHER M8 SPLIT ZINC	2
3	800539	R-206 WASHER M8 FLAT ZINC	2
4	701195	ANTI-VIBRATION MOUNT 30MM X 30MM M8 FEM THREAD	2

Figure 6: Exploded view of the anti-vibration mount and fasteners (on VS2-6P model only).

Frame Kit

Parts breakdown

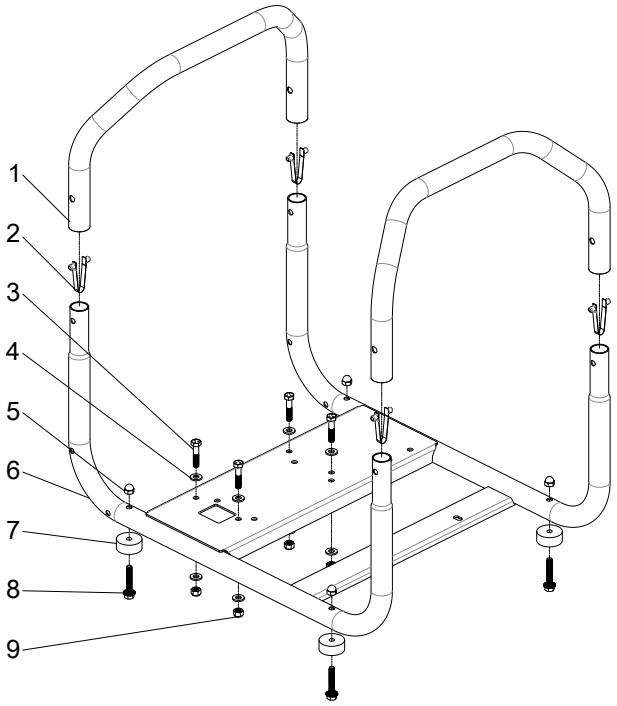

ID	ITEM NO	DESCRIPTION	QTY
1	701301	FRAME HANDLE VERSAX	2
2	801288	QUICK RELEASE BUTTON FOR TUBING	4
3	801282	SCREW 5/16-18X1-1/2 HEX CAP ZINC	4
4	800477	A-7586-2 WASHER 5/16 FLAT ZINC	8
5	801287	NUT 5/16-18 ACORN ZINC	4
6	701297	FRAME BASE ASSEMBLY VERSAX	1
7	800420	C-6650-10 RUBBER MOUNT	4
8	801286	SCREW 5/16-18X1-3/4 HEX FLANGE ZINC	4
9	801285	NUT 5/16-18 HEX NYLON LOCK ZINC	4

Figure 7: Exploded view of the Wrap-Around frame for the VS2-6W, VS2-9W and VS2-9EW.

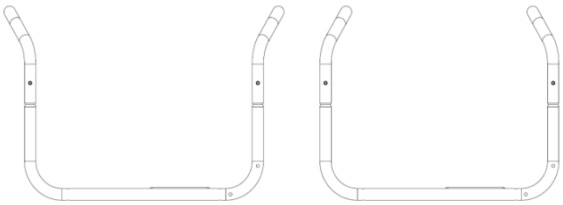

Figure 8: Alternate positions of handles

Installation

The following steps refer to figure 7

1. Install the quick release buttons #2 into the base frame #6 by pushing them into the tube until the pins pop out into the access holes.

> **IMPORTANT:** Ensure that the handles #1 are fully engaged with the quick release buttons #2. A misalignment or a bad fit may result in the handle slipping out of place and dropping the pump which may result in serious injuries. Refer to figure 9.

2. Install the rubber mounts #7 using the flanged screws #8 and acorn nuts #5.
3. Install pump onto the base frame #6 using the hardware #3, 4 & 9. Note that the outer most mounting holes are for the VS2-9W & VS2-9EW and the inner most holes are for the VS2-6W.
4. Install the handles #1 in the preferred orientation. Refer to figure 8

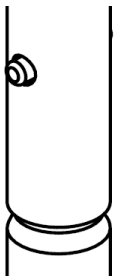

Figure 9: Good fit

Cart Kit

Parts breakdown

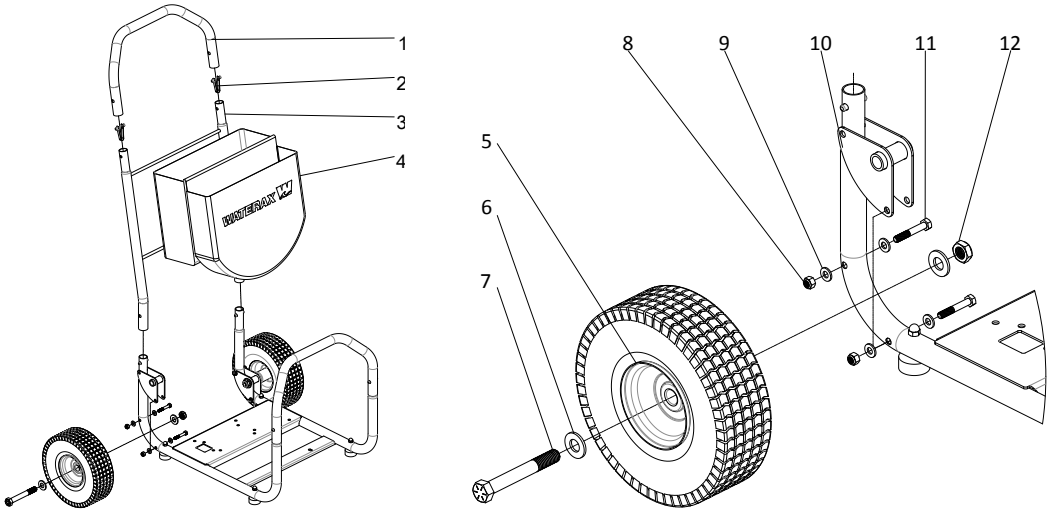

Figure 10: Exploded view of the cart system for the VS2-6W, VS2-9W and VS2-9EW

ID	ITEM NO	DESCRIPTION	QTY
1*	701301	FRAME HANDLE VERSAX	--
2	801288	QUICK RELEASE BUTTON FOR TUBING	2
3	701300	FRAME EXTENSION ASSEMBLY VERSAX	1
4	701306	EQUIPMENT POUCH VERSAX	1
5	801290	WHEEL 10" FLAT FREE 16MMX50MM HUB	2
6	801279	WASHER 5/8 FLAT ZINC	4
7	801283	SCREW 5/8-11X4-3/4 HEX CAP ZINC	2
8	801285	NUT 5/16-18 HEX NYLON LOCK ZINC	4
9	800477	A-7586-2 WASHER 5/16 FLAT ZINC	8
10	701298	FRAME WHEEL BRACKET ASSEMBLY VERSAX	2
11	801281	SCREW 5/16-18X2 HEX CAP ZINC	4
12	801284	NUT 5/8-11 HEX THIN NYLON LOCK ZINC	2

* IS NOT INCLUDED IN THE CART KIT

Installation

The following steps refer to figure 10

1. Remove the handle #1 from the base frame.
2. Install the frame extension #3 onto the base frame, ensuring a proper lock between the extension and the quick release buttons.
3. Install the quick release buttons #2 into the frame extension #3 by pushing them into the tube until the pins pop out into the access holes.
4. Install the handles #1 in the frame extension.

IMPORTANT: Ensure that the handle #1 and the frame extension #3 are fully engaged with the quick release buttons. A misalignment or a bad fit may result in the handle or extension slipping out of place and dropping the pump which may result in serious injuries. Refer to figure 9.

5. Install wheel #5 onto wheel bracket #10 using hardware 6, 7 &12. Note that over tightening the nylon lock nut #12 will restrict the rotation of the wheel. When tightening, ensure that the wheel is free to move. Ensure however that the nut is fully engaged onto the screw threads.
6. Install wheel bracket (now with wheel assembled onto it) onto the base frame using hardware #8, 9 & 11.
7. Install equipment pouch #4 onto frame extension #3 using the snap buttons and the Velcro straps.

Battery System (VS2-9EW Only)

Parts breakdown

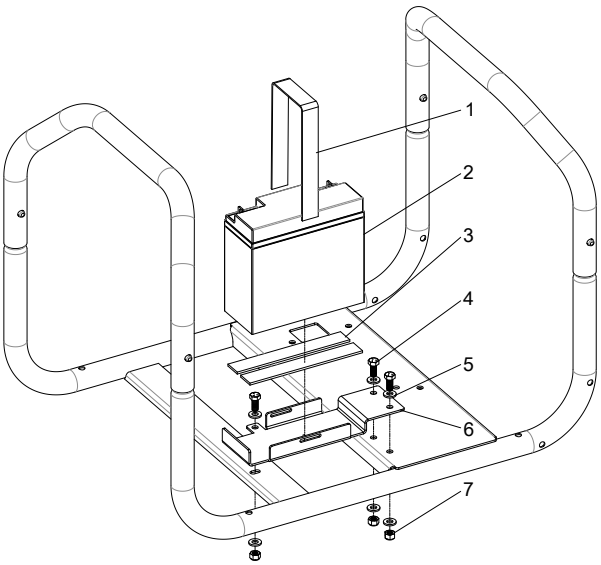

Figure 11: Exploded view of the battery kit for the VS2-9EW.

ID	ITEM NO	DESCRIPTION	QTY
1	701308	BATTERY STRAP VERSAX	1
2	700673	PART-764 VRLA SEALED BATTERY 12V 20AH	1
3	800860	QADHNEO1X1/8 SELF-ADHESIVE STRIP	1.2
4	801280	SCREW 5/16-18X3/4 HEX CAP ZINC	3
5	800477	A-7586-2 WASHER 5/16 FLAT ZINC	6
6	701299	BATTERY BRACKET VERSAX	1
7	801285	NUT 5/16-18 HEX NYLON LOCK ZINC	3
--	800921	PART-456 BATTERY BOOTS 8-2GA RED	2
--	700026	RK-1733 PROTECTOR CAP	1

VS2-9EV Wiring

Standard WATERAX wiring configuration:

The VERSAX-9EV pump is wired from the factory to work with an XCP control panel. To revert to the original engine controls, refer to the next section for instructions.

XCP vs. Engine Controls:

A *WATERAX* XCP control panel cannot be operated simultaneously with the original engine controls; undesired behaviors may occur. It is recommended to remove the key switch from the engine and store it in a safe location if equipped with an XCP.

Original Engine Wiring Configuration:

To revert back to the Original Engine Controls refer to the instructions below.

ENGINES	FOR XCP	FOR ENGINE CONTROLS
HONDA GX270 9 HP	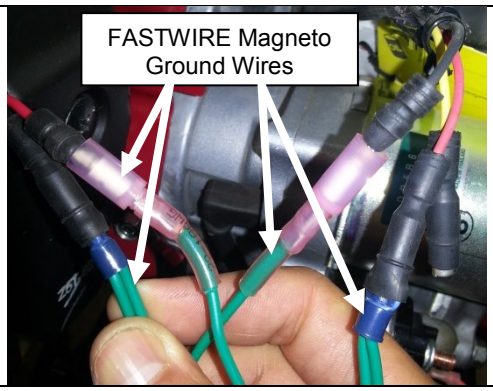	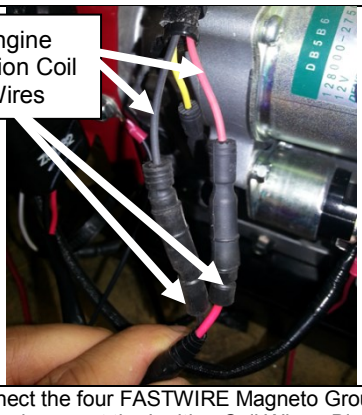
		Disconnect the four FASTWIRE Magneto Ground Wires and connect the Ignition Coil Wires. Black with Black and Red with Red.
	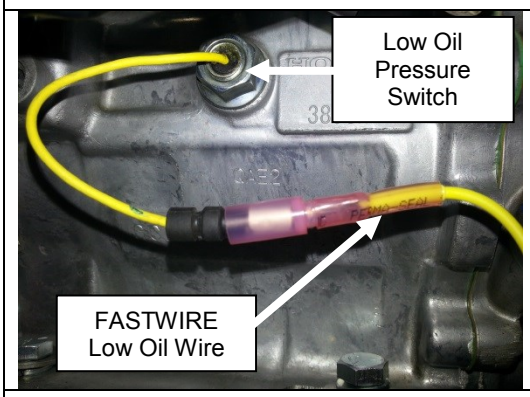	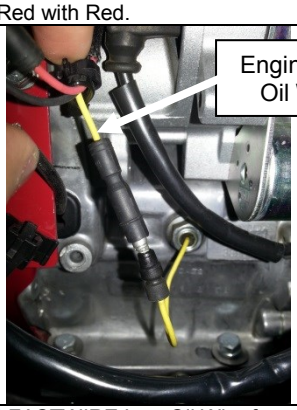
		Disconnect FASTWIRE Low Oil Wire from the Low Oil Pressure Switch and connect the Engine Controls Low Oil Wire. Secure the remaining wire

FastWire Wiring Diagrams

WIRING FOR GASOLINE PUMPS

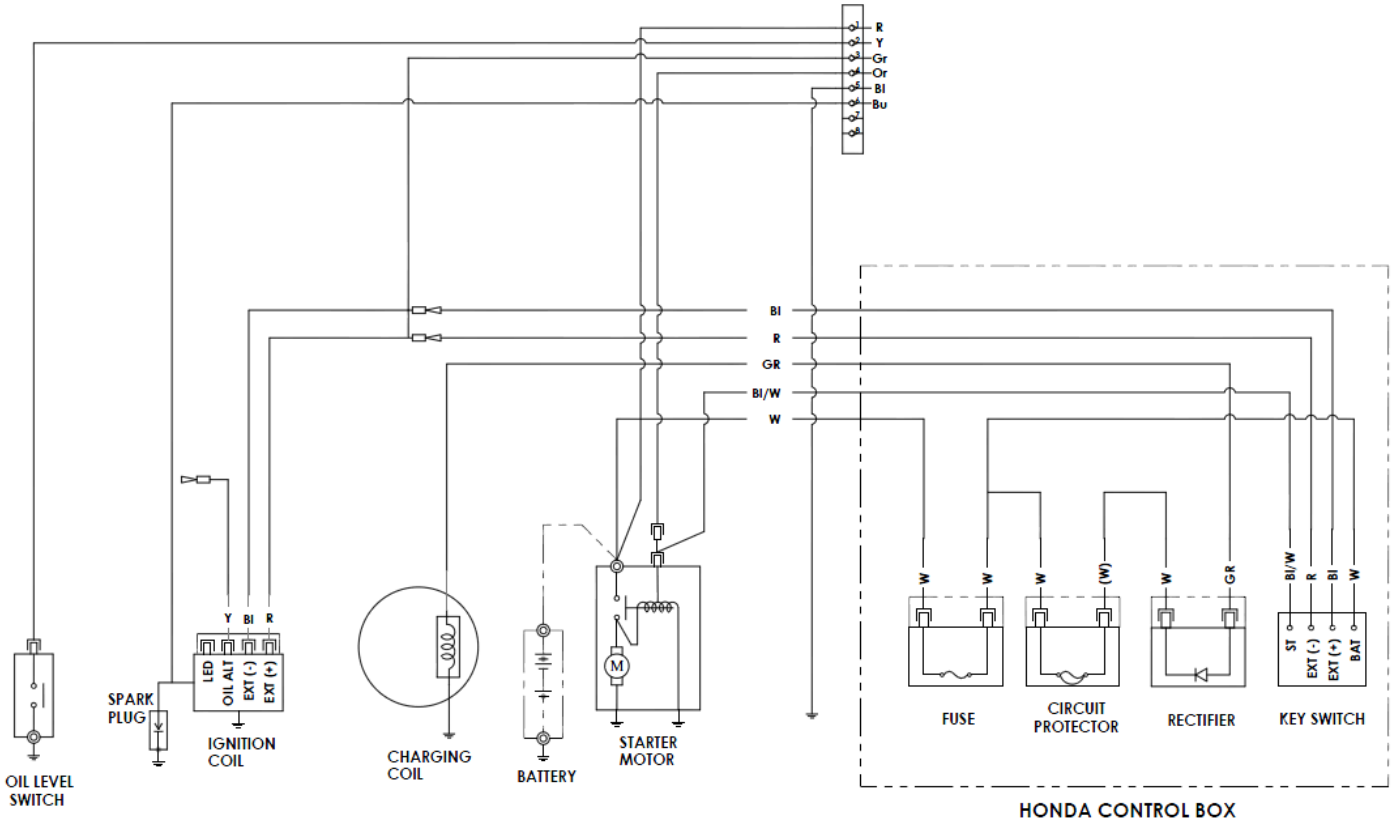

*Pins 7 & 8 connected on GX630 engine only.

Pump End Technical Data

Threads

Discharge port 1	1-1/2” [38 mm] NPT male
Discharge port 2	1” [25 mm] NPT male
Discharge port 3	1” [25 mm] NPT male
Suction (intake) port	2” [51 mm] NPT male
Priming port	2” [51 mm]BSP male

Torque Values

Casing screws and nuts	221 in-lbs	25 Nm
Yoke screws	124-142 in-lbs	14- 16 Nm
Impeller screw	124-142 in-lbs	14-16 Nm
Suction flange	195-215 in-lbs	22-24 Nm
Discharge flange	195-215 in-lbs	22-24 Nm

Notes

Warranty

WHEREAS subject to the following general and specific terms and conditions, *WATERAX* Inc. (the "**Seller**") hereby warrants to the original purchaser of the products from *WATERAX*, (the "**Purchaser**") that its products, including any pump parts products manufactured by *WATERAX* (the "**Products**") sold under Seller's brands will be free of defects in material and workmanship for the applicable Warranty Period (as set out in full at www.waterax.com/eng/warranty).

Product	Warranty Period	Coverage
4-Stroke Powered Pumps	Two (2) Years	Limited
2-Stroke Powered Pumps	Earlier of One (1) Year or One hundred (100) run hours	Limited
Backpack Pumps	One (1) Year	Limited
Skid Units	One (1) Year	Limited
Control Panels, Electronics Manifolds	One (1) Year	Limited
Genuine Parts	Ninety (90) Days	Limited

1. **Limitations, exclusions and other terms and conditions applicable for all Products:**

   a. The Warranty shall be voided upon the occurrence of any of the following events: (a) the Product is used for an application, with products or in a manner other than the application, products and manner for which such Product is designed and intended; (b) the Product is subjected to a use, service, condition or environment other than a use, service, condition or environment for which such Product is designed and intended; (c) the Product is not properly installed by the Purchaser or its agent or representative; (d) the Product is not properly tested and maintained in accordance with Seller's product manuals and supplemental instructions and guidelines, applicable industry standards and guidelines, and applicable legal and regulatory requirements; (e) the Product is altered, modified, serviced (with the exception of routine maintenance performed in accordance with the Seller's product manuals and supplemental instructions as set out in full at www.waterax.com/eng/warranty, and industry accepted standards and guidelines), or repaired by a person other than the Seller or a person authorized by the Seller to make such alteration or modification or perform such service or repair; (f) the Seller is not paid the full amount of the purchase price for the Product when due; (g) any bad faith invocation of a warranty claim or breach of a purchase agreement by the Purchaser.

   b. The following are excluded from Warranty coverage: (a) non-defective parts worn, exhausted or consumed through normal usage of the Product; (b) any consumable parts normally subject to routine replacement, including but not limited to pump packing, O-rings, gaskets, intake screens, anodes or filters; (c) routine maintenance as specified and in accordance with the Seller's product manuals and supplemental instructions and guidelines as set out in full at www.waterax.com/eng/warranty; (d) failure due to compliance with a specification or design provided or required by Purchaser; (e) failure due to improper operation, excess pressure, excess voltage, abuse, misuse, negligence or accidents or other similar causes; (f) failure due to operator error; (g) damage during or after shipment and failure attributable thereto or resulting there from; (h) failure attributable to or resulting from the failure or substandard, inadequate or improper performance of any part, component or equipment not supplied by the Seller; (i) failure attributable to or resulting from the failure or substandard, inadequate or improper performance of any third party part, component, product or equipment, whether or not combined, packaged, incorporated, installed or used with a Seller brand part, component, product or equipment.

2. **Claim Procedure.** The claim procedure applicable under this warranty, including any applicable notice and documentation requirements, are set out in full at www.waterax.com/eng/warranty and constitute an essential term of this Warranty.

3. **Repaired and Replacement Product.** If requested to do so by the Purchaser the Seller may, at its sole option and in its sole discretion, supply a replacement Product or part to the Purchaser prior to making a final determination as to whether Warranty Coverage is available.

   If the Seller ultimately determines that no Warranty Coverage is available for a Product claimed to be defective, the Purchaser shall have the option of either (a) having the Product returned to it freight collect without repair or replacement; or (b) if Seller determines that the Product is repairable, have the Product repaired by Seller or another party designated by it on a time and materials basis at Seller's then current standard charges for non-warranty repairs and then returned to Purchaser freight collect. The Seller reserves the right to use reconditioned parts for Warranty repairs and to use reconditioned Products for Warranty replacements. Repaired Product and replacement Product shall be warranted only for the remainder of the original Warranty Period.

4. **Limitation of Liability:** SELLER'S WARRANTY AS SET FORTH HEREIN IS SELLER'S SOLE AND EXCLUSIVE WARRANTY AND IS IN LIEU OF ALL OTHER WARRANTIES, EXPRESS OR IMPLIED, INCLUDING, BUT NOT LIMITED TO, ALL WARRANTIES OF MERCHANTABILITY, QUALITY, COURSE OF DEALING, USAGE OF TRADE, FITNESS FOR A PARTICULAR PURPOSE AND NON-INFRINGEMENT. THE RIGHTS AND REMEDIES SET FORTH HEREIN ARE THE SOLE AND EXCLUSIVE RIGHTS AND REMEDIES AGAINST SELLER, EXCEPT FOR THE SPECIFIC LIABILITIES AND OBLIGATIONS PROVIDED HEREIN, SELLER SHALL HAVE NO LIABILITY OR OBLIGATION WITH RESPECT TO ANY PRODUCT CLAIMED TO BE DEFECTIVE IN ANY MANNER.

WATERAX

WE MOVE WATER

***WATERAX* Inc.**
6635 Henri-Bourassa W.
Montreal, QC H4R 1E1

TF 855-616-1818

T 514-637-1818
F 514-637-3985

info@*WATERAX*.com
www.*WATERAX*.com

All information contained in this document including drawings is proprietary to *WATERAX* and may not be copied, reproduced or used in whole or in part without our prior written permission. The information in this document is subject to change without notice. Model displayed with multiple options. Weight and dimensions are approximated and may vary depending on options.